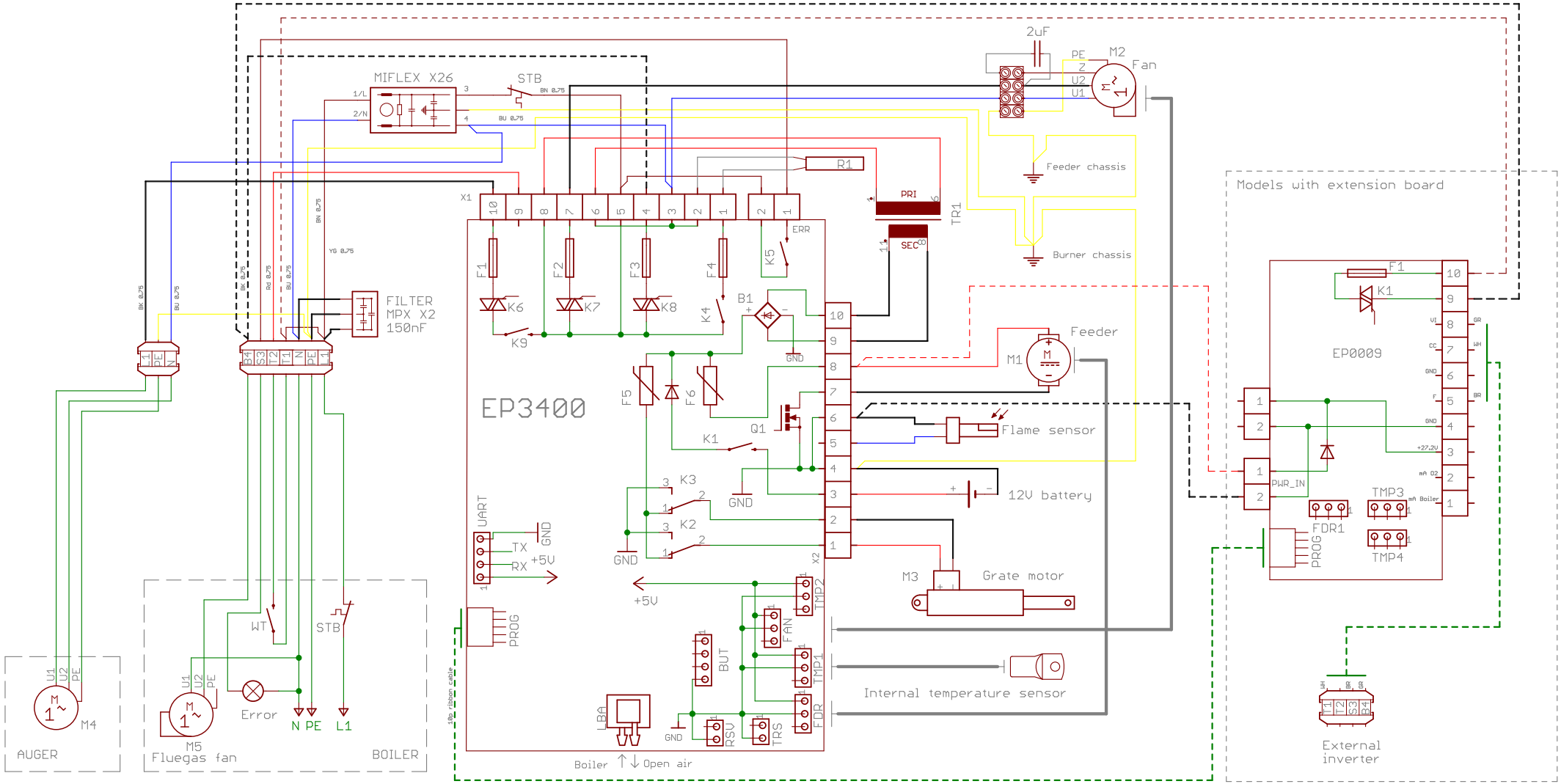
MIFLEX X26
STB
1/L
2/N
BN 0.75
BU 0.75
2uF
M2
Fan
PE
Z
U2
U1
Feeder chassis
Burner chassis
R1
PRI
SEC
TR1
X1
ERR
F1
F2
F3
F4
K5
K6
K7
K8
K4
K9
B1
GND
FILTER
MPX X2
150nF
EP3400
F5
F6
Q1
K1
K3
K2
Feeder
M1
Flame sensor
12V battery
M3
Grate motor
Internal temperature sensor
UART
TX
RX
+5V
PROG
TMP2
FAN
TMP1
BUT
FDR
LBA
RSV
TRS
10p ribbon cable
Boiler
Open air
Models with extension board
EP0009
PWR_IN
TMP3
FDR1
TMP4
External inverter
AUGER
M4
WT
STB
M5
Fluegas fan
Error
N PE
L1
BOILER